ISP DECIMATOR G-STRING

Based on schematic and layout by João Galego
Layout modified by Fernando Ruz
Thanks to StefSamy for the pictures

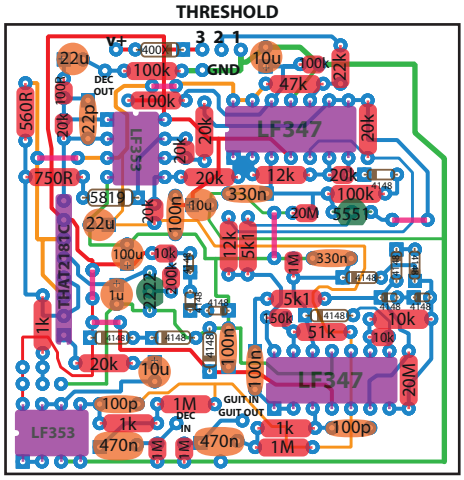

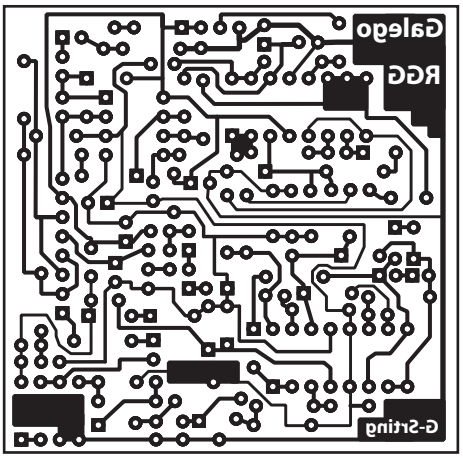

60x59mm

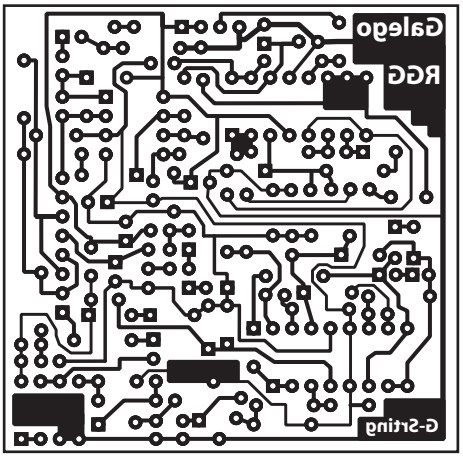

60x59mm

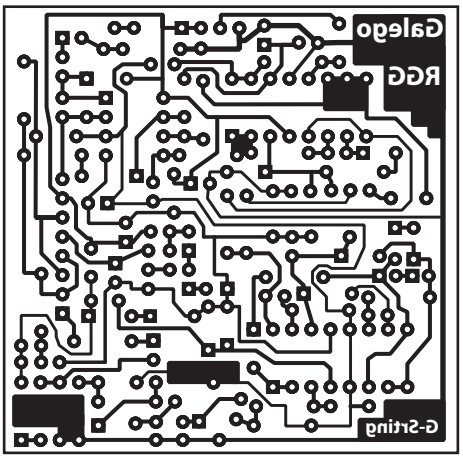

60x59mm

ICS:

2 x LF347
2 x LF353
1 x THAT2181C

TRS:

1 x MPS2222A
1 x 2N5551

DIODES:

13 x 1N4148 (1N914)
1 x 1N5819 (MBR150)
1 x 1N400X (Protection diode)

POT:

1 x 10KB

www.diystompboxes.com